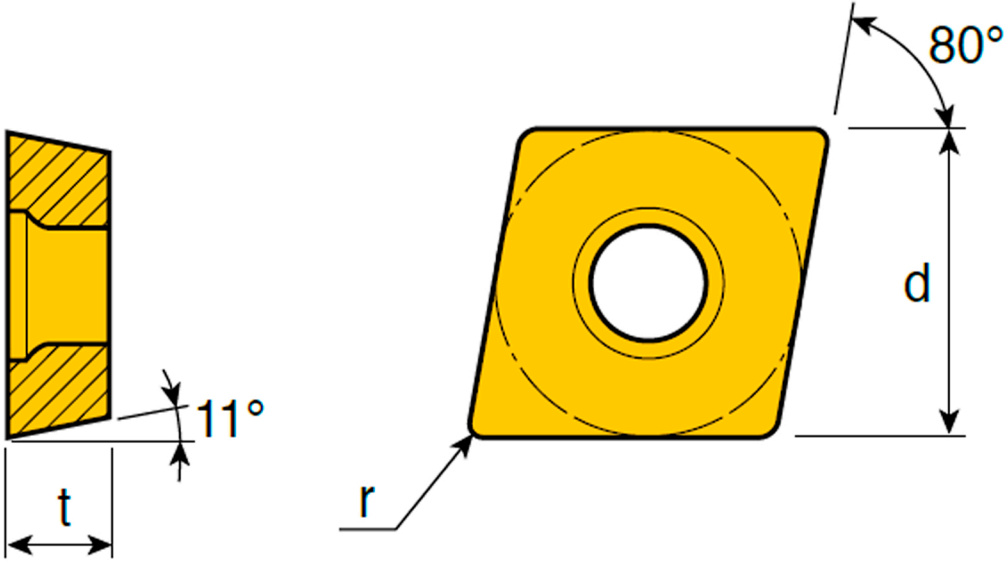

Size	Dimension (mm)		
	d	t	r
06	6.35	2.38	0.4-0.8
08	7.94	2.38	0.4-0.8
09	9.52	3.18-3.97	0.4-0.8

Insert	Designation		feed (mm/rev)	ap (mm)
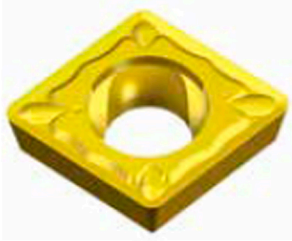 For Finishing	**CPMT**	**080204 FG**	0.07-0.20	0.4-1.5
		080208 FG	0.10-0.25	0.6-1.5
		090304 FG	0.07-0.20	0.4-2.0
		090308 FG	0.10-0.25	0.6-2.0