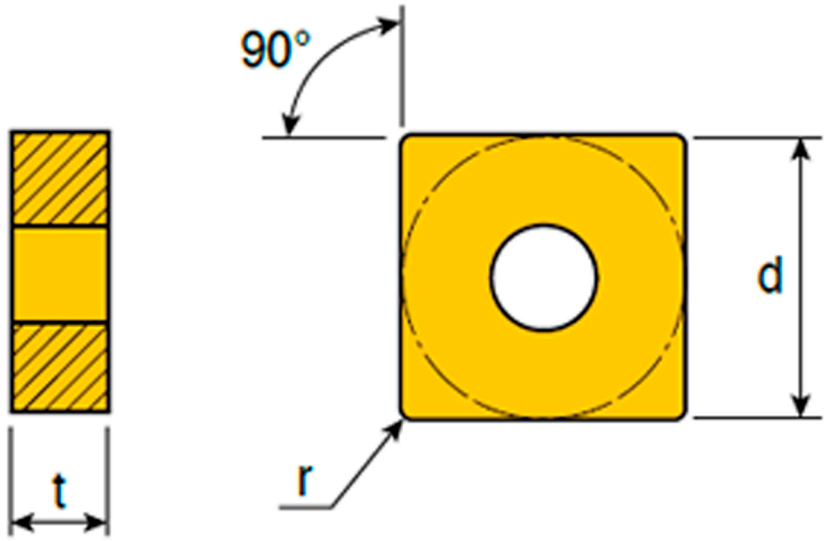

Size	Dimension (mm)		
	d	t	r
09	9.52	4.76	0.4-1.2
12	12.7	4.76	0.4-1.2
15	15.88	6.35	0.8-1.2
19	19.05	6.35	0.8-1.2

Insert	Designation		feed (mm/rev)	ap (mm)
For Medium	**SNMG**	**120404 MT** ✓	0.12-0.40	1.0-5.0
		120408 MT	0.17-0.55	1.2-5.0
		120412 MT ✓	0.20-0.55	1.5-5.0
		150612 MT ✓	0.30-0.65	2.0-7.0
		190608 MT	0.17-0.55	3.0-8.0
		190612 MT	0.20-0.55	3.0-8.0