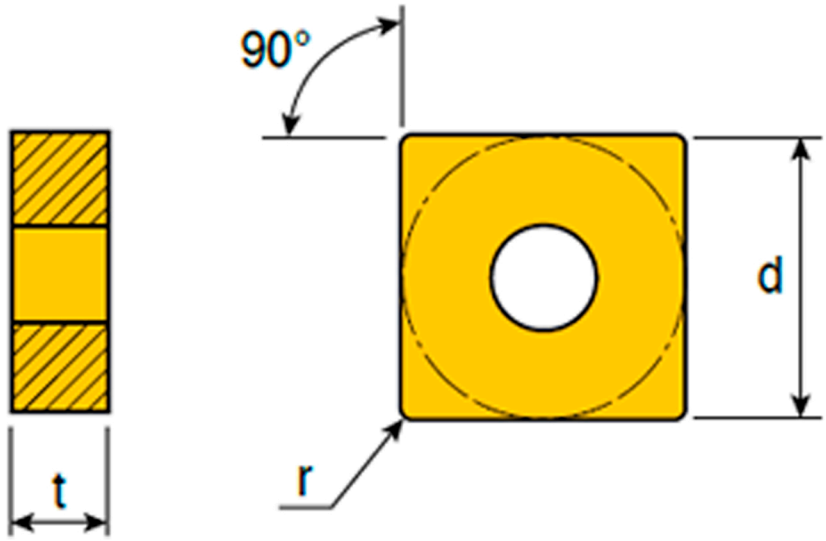

Size	Dimension (mm)		
	d	t	r
09	9.52	4.76	0.4-1.2
12	12.7	4.76	0.4-1.2
15	15.88	6.35	0.8-1.2
19	19.05	6.35	0.8-1.2

Insert	Designation		feed (mm/rev)	ap (mm)
For Medium	**SNMG**	**120408 ML**	0.12-0.35	1.0-3.5
		120412 ML	0.15-0.35	1.0-3.5