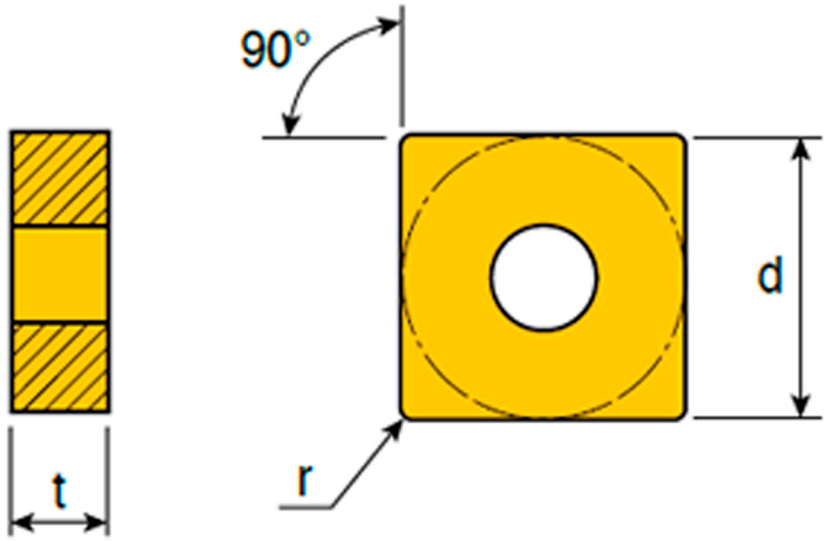

Size	Dimension (mm)		
	d	t	r
09	9.52	4.76	0.4-1.2
12	12.7	4.76	0.4-1.2
15	15.88	6.35	1.2-1.6
19	19.05	6.35	0.8-1.6

Insert	Designation		feed (mm/rev)	ap (mm)
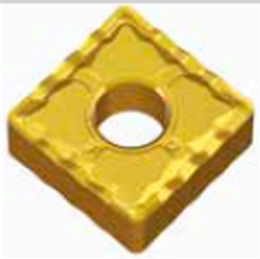 For Finishing	**SNMG**	**120404 FC**	0.05-0.30	0.2-2.5
		120408 FC	0.08-0.35	0.2-2.5
		120412 FC	0.10-0.40	0.3-2.5