Pinzas OZ16 de Precisión 0.005
Precision collets OZ16 Accuracy 0.005

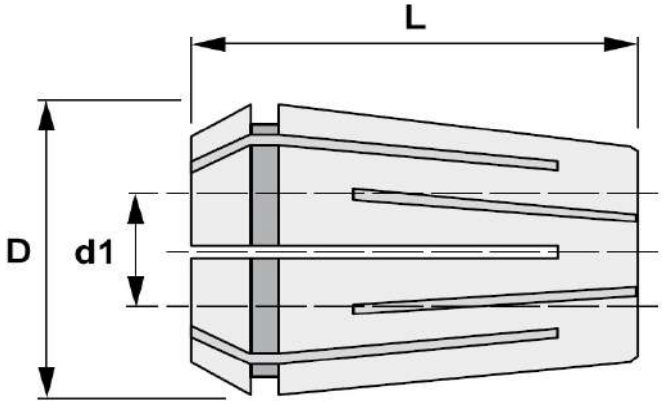

Referencia Reference	Tipo de pinza Collet type	d1	D	L
OZ161.5-2.0-GS	OZ16	1.5-2.0	25.50	40
OZ162.5-3.0-GS	OZ16	2.5-3.0	25.50	40
OZ163.5-4.0-GS	OZ16	3.5-4.0	25.50	40
OZ164.5-5.0-GS	OZ16	4.5-5.0	25.50	40
OZ165.5-6.0-GS	OZ16	5.5-6.0	25.50	40
OZ166.5-7.0-GS	OZ16	6.5-7.0	25.50	40
OZ167.5-8.0-GS	OZ16	7.5-8.0	25.50	40
OZ168.5-9.0-GS	OZ16	8.5-9.0	25.50	40
OZ169.5-10.0-GS	OZ16	9.5-10.0	25.50	40
OZ1610.5-11-GS	OZ16	10.5-11	25.50	40
OZ1611.5-12.0-GS	OZ16	11.5-12.0	25.50	40
OZ1612.5-13.0-GS	OZ16	12.5-13.0	25.50	40
OZ1613.5-14.0-GS	OZ16	13.5-14.0	25.50	40
OZ1614.5-15.0-GS	OZ16	14.5-15.0	25.50	40
OZ1615.5-16.0-GS	OZ16	15.5-16.0	25.50	40

Pinzas OZ25 de Precisión 0.005
Precision collets OZ25 Accuracy 0.005

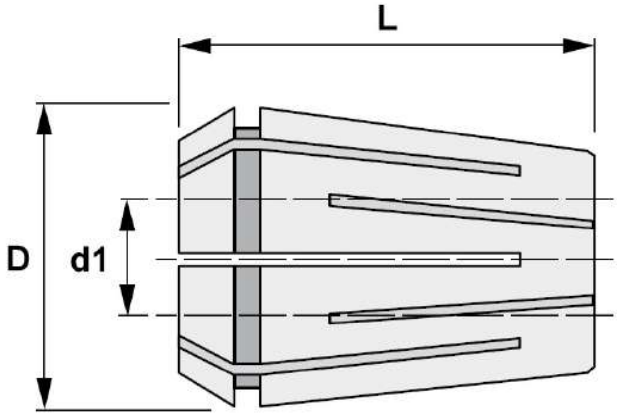

Referencia Reference	Tipo de pinza Collet type	d1	D	L
OZ251.5-2.0-GS	OZ25	1.5-2.0	35.05	52
OZ252.5-3.0-GS	OZ25	2.5-3.0	35.05	52
OZ253.5-4.0-GS	OZ25	3.5-4.0	35.05	52
OZ254.5-5.0-GS	OZ25	4.5-5.0	35.05	52
OZ255.5-6.0-GS	OZ25	5.5-6.0	35.05	52
OZ256.5-7.0-GS	OZ25	6.5-7.0	35.05	52
OZ257.5-8.0-GS	OZ25	7.5-8.0	35.05	52
OZ258.5-9.0-GS	OZ25	8.5-9.0	35.05	52
OZ259.5-10.0-GS	OZ25	9.5-10.0	35.05	52
OZ2510.5-11-GS	OZ25	10.5-11	35.05	52
OZ2511.5-12.0-GS	OZ25	11.5-12.0	35.05	52
OZ2512.5-13.0-GS	OZ25	12.5-13.0	35.05	52
OZ2513.5-14.0-GS	OZ25	13.5-14.0	35.05	52
OZ2514.5-15.0-GS	OZ25	14.5-15.0	35.05	52
OZ2515.5-16.0-GS	OZ25	15.5-16.0	35.05	52
OZ2516.5-17.0-GS	OZ25	16.5-17.0	35.05	52
OZ2517.5-18.0-GS	OZ25	17.5-18.0	35.05	52
OZ2518.5-19.0-GS	OZ25	18.5-19.0	35.05	52
OZ2519.5-20.0-GS	OZ25	19.5-20.0	35.05	52
OZ2520.5-21.0-GS	OZ25	20.5-21.0	35.05	52
OZ2521.5-22.0-GS	OZ25	21.5-22.0	35.05	52
OZ2522.5-23.0-GS	OZ25	22.5-23.0	35.05	52
OZ2523.5-24.0-GS	OZ25	23.5-24.0	35.05	52
OZ2524.5-25.0-GS	OZ25	24.5-25.0	35.05	52

Pinzas OZ32 de Precisión 0.005
Precision collets OZ32 Accuracy 0.005

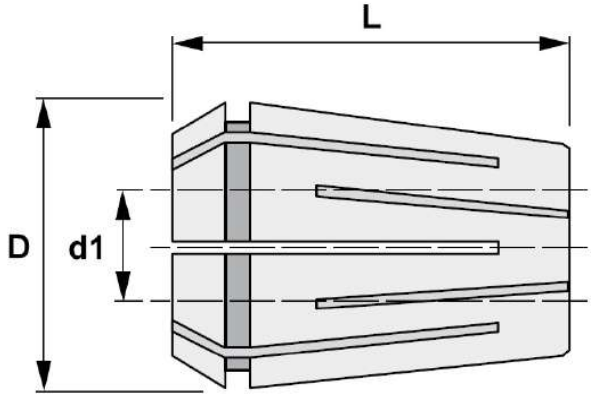

Referencia Reference	Tipo de pinza Collet type	d1	D	L
OZ322.5-3.0-GS	OZ32	2.5-3.0	43.70	60
OZ323.5-4.0-GS	OZ32	3.5-4.0	43.70	60
OZ324.5-5.0-GS	OZ32	4.5-5.0	43.70	60
OZ325.5-6.0-GS	OZ32	5.5-6.0	43.70	60
OZ326.5-7.0-GS	OZ32	6.5-7.0	43.70	60
OZ327.5-8.0-GS	OZ32	7.5-8.0	43.70	60
OZ328.5-9.0-GS	OZ32	8.5-9.0	43.70	60
OZ329.5-10.0-GS	OZ32	9.5-10.0	43.70	60
OZ3210.5-11-GS	OZ32	10.5-11	43.70	60
OZ3211.5-12.0-GS	OZ32	11.5-12.0	43.70	60
OZ3212.5-13.0-GS	OZ32	12.5-13.0	43.70	60
OZ3213.5-14.0-GS	OZ32	13.5-14.0	43.70	60
OZ3214.5-15.0-GS	OZ32	14.5-15.0	43.70	60
OZ3215.5-16.0-GS	OZ32	15.5-16.0	43.70	60
OZ3216.5-17.0-GS	OZ32	16.5-17.0	43.70	60
OZ3217.5-18.0-GS	OZ32	17.5-18.0	43.70	60
OZ3218.5-19.0-GS	OZ32	18.5-19.0	43.70	60
OZ3219.5-20.0-GS	OZ32	19.5-20.0	43.70	60
OZ3220.5-21.0-GS	OZ32	20.5-21.0	43.70	60
OZ3221.5-22.0-GS	OZ32	21.5-22.0	43.70	60
OZ3222.5-23.0-GS	OZ32	22.5-23.0	43.70	60
OZ3223.5-24.0-GS	OZ32	23.5-24.0	43.70	60
OZ3224.5-25.0-GS	OZ32	24.5-25.0	43.70	60
OZ3225.5-26.0-GS	OZ32	25.5-26.0	43.70	60
OZ3226.5-27.0-GS	OZ32	26.5-27.0	43.70	60
OZ3227.5-.28-GS	OZ32	27.5-.28	43.70	60
OZ3228.5-29.0-GS	OZ32	28.5-29.0	43.70	60
OZ3229.5-30.0-GS	OZ32	29.5-30.0	43.70	60
OZ3230.5-31.0-GS	OZ32	30.5-31.0	43.70	60
OZ3231.5-32.0-GS	OZ32	31.5-32.0	43.70	60