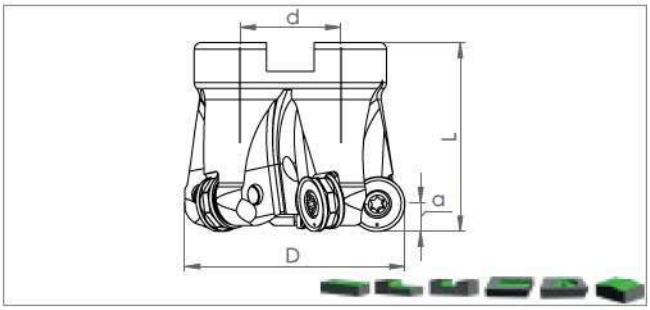

Ordering Code	Item Designation	Dimensions (mm)						Master Insert*
	TK RNMU 1004.. / 1205.. / 1606..		*D*	*Z*	*d*	*L*	*a*	
SM43060	TK RN10 D40 A16 Z04-H	✓	40	4	16	40	5	RNMU 1004..
SM43077	TK RN10 D50 A22 Z05-H	✓	50	5	22	40	5	
SM43084	TK RN12 D40 A16 Z04-H	✓	40	4	16	40	6	RNMU 1205..
SM40168	TK RN12 D50 A22 Z05-H	✓	50	5	22	40	6	
SM43091	TK RN12 D63 A22 Z06-H	✓	63	6	22	40	6	
SM43107	TK RN16 D50 A22 Z04-H	✓	50	4	22	40	8	RNMU 1606..
SM43114	TK RN16 D63 A22 Z05-H	✓	63	5	22	40	8	
SM43121	TK RN16 D80 A27 Z06-H	✓	80	6	27	50	8	

Cooling mounting screw is optional / See Page "K438" for cooling mounting screws.
İçten su vermeli montaj vidaları opsiyoneldir. / Bkz. Sayfa "K438" İçten su vermeli montaj vidaları için.

Size Designation	Master Insert*	Spare Parts		
		Screw	Torx Key	Screw Torque Value
				N·m
D25 - D50	RNMU 1004..	SSV M3.5x10-9511	STK-T15-9910	2,9
D32 - D63	RNMU 1205..	SSV M4x9x5-9528		4,3
D50 - D80	RNMU 1606..	SSV M5x13-9519	STK-T20-9911	8,5

*Suitable Insert brand is TGTC