SMOXH CUTTING TOOLS
Kalitenin Yükselen Gücü

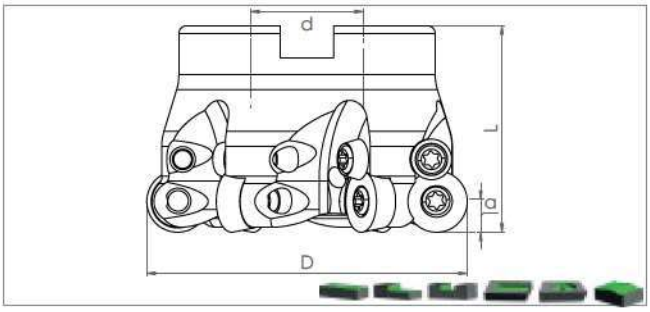

Ordering Code	Item Designation	Dimensions (mm)						Master Insert*
	TK RD.. 10T3.. / 1204		*D*	*Z*	*d*	*L*	*a*	
SM32958	TK RD10T3 D40 A16 Z04-H	✓	40	4	16	40	5	RD.. 10T3..
SM32903	TK RD10T3 D40 A16 Z04	-	40	4	16	40	5	
SM32934	TK RD10T3 D50 A22 Z05-H	✓	50	5	22	40	5	
SM32910	TK RD10T3 D50 A22 Z05	-	50	5	22	40	5	
SM32941	TK RD10T3 D63 A22 Z06-H	✓	63	6	22	40	5	
SM32927	TK RD10T3 D63 A22 Z06	-	63	6	22	40	5	
SM32972	TK RD1204 D40 A16 Z04-H	✓	40	4	16	40	6	RD.. 1204..
SM32897	TK RD1204 D40 A16 Z04	-	40	4	16	40	6	
SM32989	TK RD1204 D50 A22 Z05-H	✓	50	5	22	40	6	
SM32965	TK RD1204 D50 A22 Z05	-	50	5	22	40	6	
SM33252	TK RD1204 D63 A22 Z06-H	✓	63	6	22	40	6	
SM33245	TK RD1204 D63 A22 Z06	-	63	6	22	40	6	
SM33276	TK RD1204 D80 A27 Z07-H	✓	80	7	27	50	6	
SM33269	TK RD1204 D80 A27 Z07	-	80	7	27	50	6	
SM33290	TK RD1204 D100 A32 Z08-H	✓	100	8	32	50	6	
SM33283	TK RD1204 D100 A32 Z08	-	100	8	32	50	6	

Cooling mounting screw is optional / See Page "K438" for cooling mounting screws.
İçten su vermeli montaj vidaları opsiyoneldir. / Bkz. Sayfa "K438" İçten su vermeli montaj vidaları için.

Size Designation	Master Insert*	Spare Parts				
		Screw	Torx Key	Wedge Clamp	Clamp Screw	Screw Torque Value
						N·m
D40 - D63	RD.. 10T3..	SSV M3.5x10-9511	STK-T15-9910	RDTP 9124	SSV M3.5x11 9532	2,9
D40 - D100	RD.. 1204..					

*Suitable Insert brand is ISO