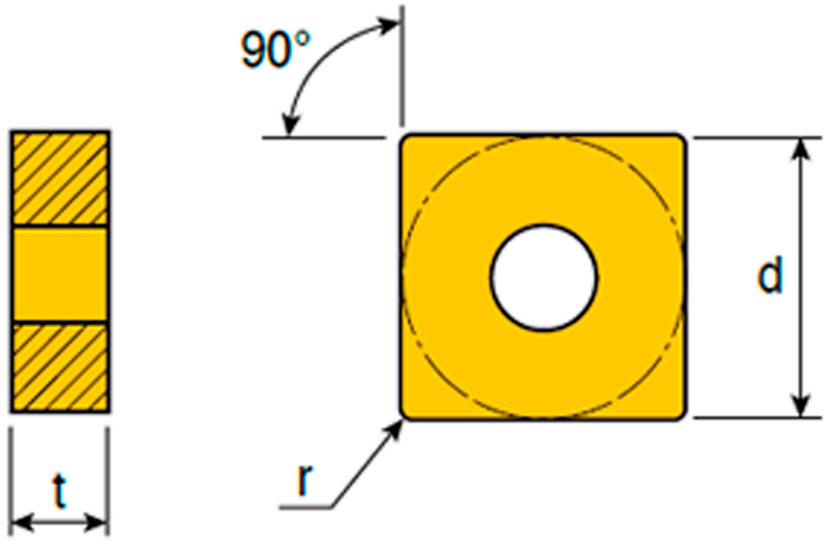

Size	Dimension (mm)		
	d	t	r
09	9.52	4.76	0.4-1.2
12	12.7	4.76	0.4-1.6
15	15.88	6.35	0.8-1.6
19	19.05	6.35	0.4-1.6
25	25.4	7.94-9.52	1.6-2.4

Insert	Designation		feed (mm/rev)	ap (mm)
For Medium	**SNMG**	**120404**	0.17-0.45	1.0-5.0
		120408	0.23-0.60	1.5-5.0
		120412	0.25-0.60	2.0-5.0
		120416	0.35-0.70	2.0-5.0
		150608	0.25-0.60	1.5-6.0
		150612	0.25-0.60	2.0-6.0
		150616	0.35-0.70	2.0-6.0
		190604	0.17-0.45	3.0-8.0
		190608	0.25-0.60	3.0-8.0
		190612	0.30-0.60	3.0-8.0
		190616	0.35-0.70	3.0-8.0
		250716	0.35-0.70	4.0-12.0
		250724	0.50-1.00	5.0-12.0
		250924	0.50-1.00	5.0-12.0