# YÜZEY FREZELER
## Face Milling Cutter

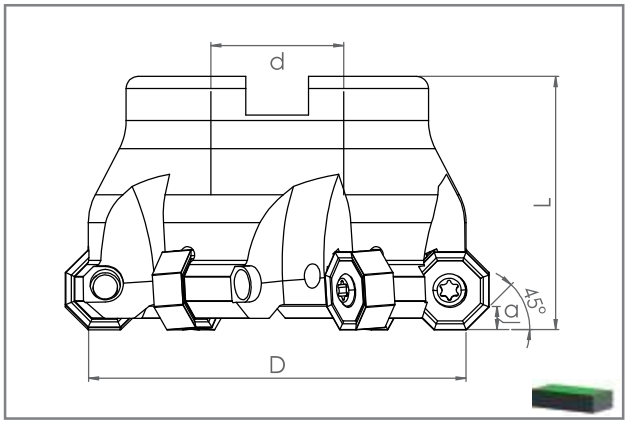

| KOD CODE | ÖLÇÜLER DIMENSION (mm) | | | | | KESİCİ UÇ INSERT | YEDEK PARÇALAR SPARE PARTS | |
|---|---|---|---|---|---|---|---|---|
| TK45 ON.X 0504 / 0606 / 0806.. | D | Z | d | L | a | | Sıkma Vidası Clamp Screw | Anahtar Torx Key |
| TK45 ON05 D50 A22 Z05-H | 50 | 5 | 22 | 40 | 2.5 | ON.X 0504.. ISCR UCA UYGUNDUR FOR ISCR INSERT | SSV M5x13 9519 | T20 |
| TK45 ON05 D63 A22 Z06-H | 63 | 6 | 22 | 40 | 2.5 | | | |
| TK45 ON05 D80 A27 Z07-H | 80 | 7 | 27 | 50 | 2.5 | | | |
| TK45 ON05 D100 A32 Z08-H | 100 | 8 | 32 | 50 | 2.5 | | | |
| TK45 ON06 D63 A22 Z05-H | 63 | 5 | 22 | 40 | 4 | ON.X 0606.. KRLY UCA UYGUNDUR FOR KRLY INSERT | SSV M5x13 9519 | T20 |
| TK45 ON06 D80 A27 Z06-H | 80 | 6 | 27 | 50 | 4 | | | |
| TK45 ON06 D100 A32 Z07-H | 100 | 7 | 32 | 50 | 4 | | | |
| TK45 ON06 D125 B40 Z08 | 125 | 8 | 40 | 63 | 4 | | | |
| TK45 ON08 D63 A22 Z05-H | 63 | 5 | 22 | 40 | 5.5 | ON.X 0806.. ISO UCA UYGUNDUR FOR ISO INSERT | SSV M5x13 9519 | T20 |
| TK45 ON08 D80 A27 Z06-H | 80 | 6 | 27 | 50 | 5.5 | | | |
| TK45 ON08 D100 A32 Z07-H | 100 | 7 | 32 | 50 | 5.5 | | | |
| TK45 ON08 D125 B40 Z08 | 125 | 8 | 40 | 63 | 5.5 | | | |
| TK45 ON08 D160 C40 Z10 | 160 | 10 | 40 | 63 | 5.5 | | | |
| TK45 ON08 D200 B60 Z12 | 200 | 12 | 60 | 63 | 5.5 | | | |
| TK45 ONHU06 D63 A22 Z05-H NEW | 63 | 5 | 22 | 40 | 4 | ONHU 0604.. ZCC-CT UCA UYGUNDUR FOR ZCC-CT INSERT | SSV M4X12 9515 | T15 |
| TK45 ONHU06 D80 A27 Z06-H | 80 | 6 | 27 | 50 | 4 | | | |
| TK45 ONHU06 D100 A32 Z07-H | 100 | 7 | 32 | 50 | 4 | | | |
| TK45 ONHU08 D63 A22 Z05-H NEW | 63 | 5 | 22 | 40 | 5 | ONHU 08T6.. ZCC-CT UCA UYGUNDUR FOR ZCC-CT INSERT | SSV M5x13 9519 | T20 |
| TK45 ONHU08 D80 A27 Z06-H | 80 | 6 | 27 | 50 | 5 | | | |
| TK45 ONHU08 D100 A32 Z07-H | 100 | 7 | 32 | 50 | 5 | | | |

H-İÇTEN SU VERMELİ
H-WITH COOLANT HOLE

*YEDEK PARÇA SİPARİŞ KODLARI
*SPARE PARTS ORDERING CODES