Precision vice AMC-60G/HV mechanical

Brand: Kemmler GmbH
Order no.: KS12020

Construction:

- Clamping positions: horizontal, vertical and lateral
- The steel body is hardened and grinded all-round
- Integrated pull-down mechanism
- Bed height H: 0,01 mm

Delivery:

- Instructions for use
- Wrench
- 4 pcs. vice clamps
- 4 pcs. T-nuts 18 mm
- Test certificate

Article properties
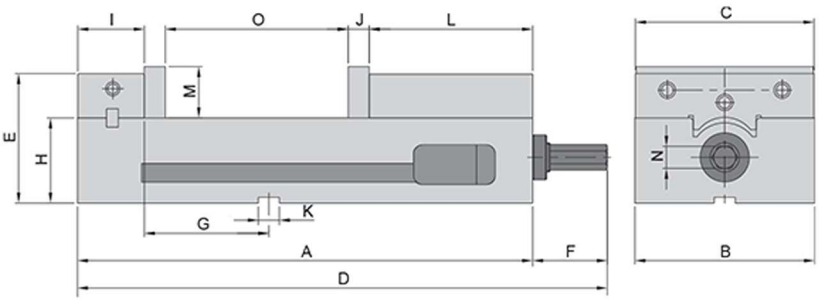
gross_L:	140
gross_E:	111
kg:	36,5
gross_O:	148
gross_I:	57
gross_H:	73
gross_G:	123
gross_F:	65
gross_D:	455
gross_J:	18
gross_M:	44,5
gross_C:	153
gross_B:	154
gross_A:	390
gross_N:	19
gross_K:	18
Type:	AMC-60G/HV